# Wireless position switch
# RF 98 DL ULR SW915
# Material no.: on request

## Product features

- Metal enclosure
- Design to EN 50041
- sWave® wireless technology
- No power supply, no wiring and pipe laying required
- Easy programming of receiver
- Output signal can be individually configured at the receiver
- Actuator: Long rocking lever DL
- Actuating speed max. 2.5 m/s with a vertical actuating angle of 30°
- Wear-resistant plastic roller
- Actuator can be repositioned by 4 x 90°

## Dimensions

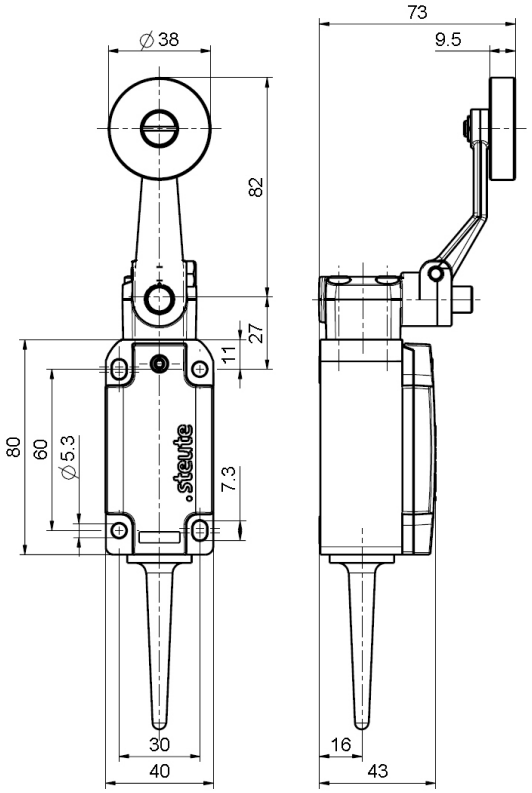


## General technical data

**Applied standards**
EN 60947-5-1, EN 61000-6-2, EN 61000-6-3, EN 301 489-1, EN 301 489-3, EN 300 220-2

**Enclosure**
aluminium die-cast, powder-coated

**Cover**
aluminium die-cast, powder-coated

**Degree of protection**
IP67 (IEC/EN 60529)

**Voltage source**
electrodynamic energy generator

**Ambient temperature**
–20 °C ⋯ +65 °C

**Operation cycles**
max. 12000 telegrams with repetitions/h

**Mechanical life**
> 1 million operations

**Actuating time**
min. 80 ms

**Note**
no status signal available

**Wireless approvals**
USA: FCC - XK5-RF95SW915LR
Canada: IC - 5158A-RF95SW915LR
Mexico: IFT - RCPSTRF17-1884

Errors and omissions excepted.

# Wireless position switch
# RF 98 DL ULR SW915
# Material no.: on request

## Wireless technology

Protocol
sWave®

Frequency
915 MHz (USA, Canada, Mexico, Australia)

Transmission power
< 25 mW

Data rate
66 kbps

Channel bandwidth
550 kHz

Wireless range
max. 700 m outdoors, max. 50 m indoors

## Switching diagram

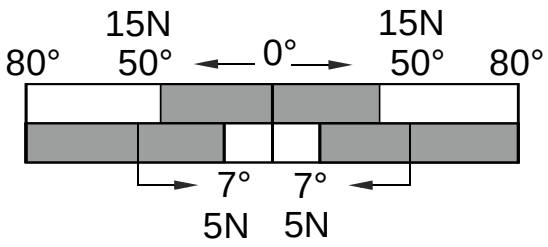


Errors and omissions excepted.