Wireless position switch
RF 96 WHM SW917
Material no.: on request

Product features

- Thermoplastic enclosure
- Mounting details to EN 50047
- Output signal can be individually configured at the receiver
- sWave® wireless technology
- No wiring and pipe laying required
- Power supply by Lithium battery (replaceable)
- Easy programming of receiver
- Actuator: Metal roller lever with collar WHM
- Actuating speed max. 0.5 m/s with a vertical actuating angle of α = 40° and β = 25°
- Watertight collar for protection against penetration of dirt
- Wear-resistant plastic roller
- Actuator can be repositioned by 4 x 90°

Notes
- With metal roller available on request

Dimensions

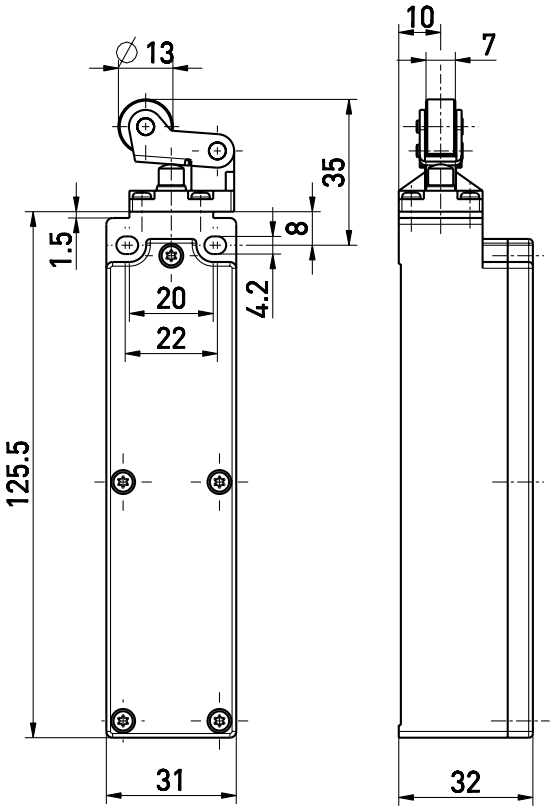

General technical data

Applied standards
EN 60947-5-1, EN 61000-6-2, EN 61000-6-3, EN 61000-4-2, EN 301 489-1, EN 301 489-3, EN 300 220-1, EN 300 220-2

Enclosure
thermoplastic, glass-fibre reinforced, shockproof, self-extinguishing UL 94 V-0

Cover
thermoplastic, glass-fibre reinforced, shockproof, self-extinguishing UL 94 V-0

Tightening torque
M4 enclosure mounting screws: max 1.2 Nm
M2.5 cover screws: approx. 0.45 Nm

Degree of protection
IP67 (IEC/EN 60529)

Ambient temperature
–20 °C ··· +65 °C

Operation cycles
max. 12000 telegrams with repetitions/h

Standby current
1.5 µA

Mechanical life
> 1 million operations

Actuating time
min. 80 ms

Note
status signal adjustable via jumper, no, 10 s, 100 s, 1000 s, 10000 s
delivery state: jumper position without status signal
transmission of battery voltage and switching condition

Wireless approvals
Brazil: ANATEL 04172-18-06718

Errors and omissions excepted.

Wireless position switch
RF 96 WHM SW917
Material no.: on request

Wireless technology

Protocol
sWave®

Frequency
917 MHz (Brazil)

Transmission power
< 25 mW

Data rate
66 kbps

Channel bandwidth
550 kHz

Wireless range
max. 450 m outdoors, max. 40 m indoors

Voltage supply

Voltage source
lithium battery Tadiran TL-5920 (replaceable), alternatively SL-2770

System
$Li/SOCl_2$

Nominal voltage
3.6 V

Nominal capacity
8.5 Ah

Alternative voltage supply

Voltage source
lithium battery Tadiran SL-2770 (replaceable)

System
$Li/SOCl_2$

Nominal voltage
3.6 V

Nominal capacity
8.5 Ah

Battery life
depending on the switching frequency
sensor mainly not activated
1 s: approx. 5.8 years,
10 s: > 10 years*
sensor mainly activated
1 s: approx. 5.6 years,
10 s: > 10 years*
* max. manufacturer's specification of storage life

Switching diagram

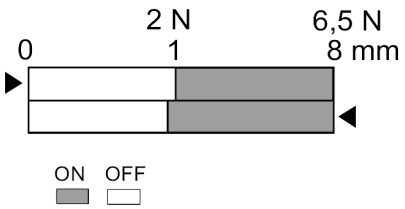

Actuating angles

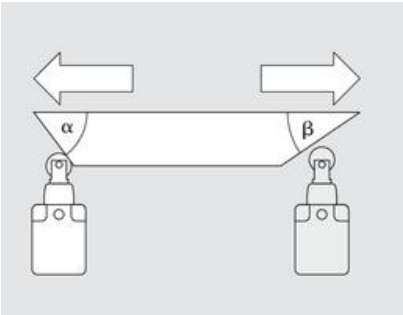

α - Actuating angle from right of switch axis
β - Actuating angle from left of switch axis as shown in picture

Errors and omissions excepted.