Ex safety sensor
Ex RC Si M30 2Ö - 10m
Material no.: 1185005 (material no. old: 23053901)

Product features

- Ex zone 1 and 21
- Metal enclosure
- Reed contacts, coded
- Actuation from front
- Switching distance up to 10 mm
- Attention: Please state required international approvals with your order!

Notes
- 2 mounting nuts are included in delivery
- The actuator is not included in the delivery of the switches

Dimensions

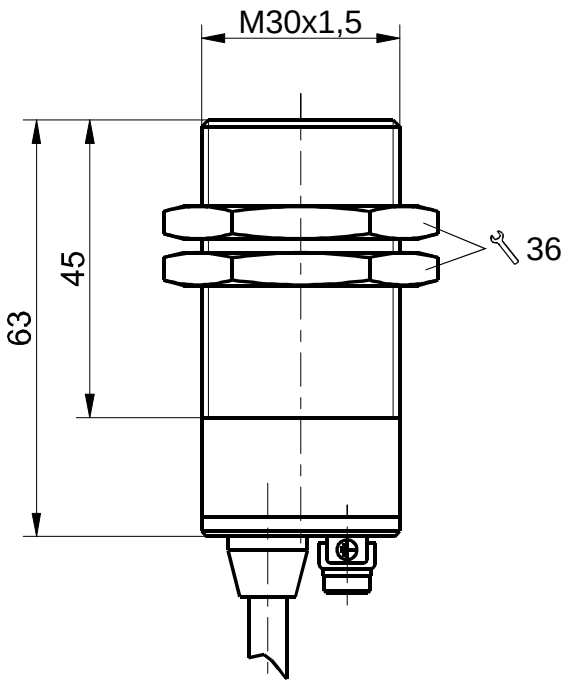

General technical data

Applied standards
EN 60947-5-1, EN 60947-5-3, EN IEC 60079-0, EN 60079-18, EN ISO 13849-1, EN ISO 14119

Enclosure
brass, nickeled

Sensor type
type 4 interlocking device

Coding level
low coding

Tightening torque
mounting nut: max. 75 Nm

Degree of protection
IP67 (IEC/EN 60529)

Switching system
reed contacts

Switching elements
2 NC contacts

Connection
cable H05VV5-F 5G

Cable cross-section
5 x 0.5 mm²

Cable length
10 m

Rated operating current I_e
max. 125 mA

Rated operating voltage U_e
max. 30 VDC

Switching capacity
max. 3.75 W

Voltage drop at I_e
2.5 V

Short-circuit current I_k
max. 750 mA for 50 ms

Operation cycles
max. 1600/h

Rated switching distance s_n
10 mm

Assured switching distance »ON« s_{ao}
8 mm

Assured switching distance »OFF« s_{ar}
30 mm

Errors and omissions excepted.

Ex safety sensor
Ex RC Si M30 2Ö - 10m
Material no.: 1185005 (material no. old: 23053901)

General technical data (contd.)

Repeatability
± 0.5 mm

Hysteresis
approx. 14 mm

Temperature class
T6

Ambient temperature
–20 °C ··· +70 °C

Mechanical life
> 10 million operations

Impact energy
max. 7 J

Ex marking
Ⓔx II 2G Ex mb IIC T6 Gb,
Ⓔx II 2D Ex mb IIIC T80°C Db
IECEx Ex mb IIC T6 Gb,
Ex mb IIIC T80°C Db

Approvals
PTB 05 ATEX 2024 X
IECEx PTB 07.0008 X

Weight
880 g

Safety-relevant data

EN ISO 13849-1
Performance Level PL e

Category
4

B_{10d} (10 % load)
20 million

T_M
max. 20 years

$MTTF_d$
> 100 years

DC/DC_{avg}
> 99 %

h_{op}
8 h/day

d_{op}
220 days/year

t_{zyklus}
20 s

Note
The safety-related data are only valid in combination with a safety module, e.g. SRM 21 RT2 (mat. no. 1179203).

Contact diagram

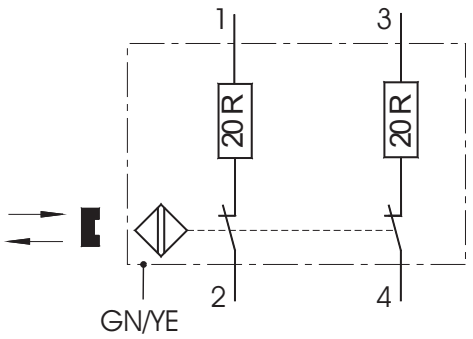

Axial misalignment

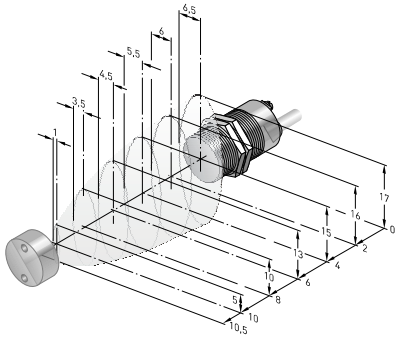

Errors and omissions excepted.