Ex command device
Ex 14 QRSKUVSE 2Ö-3m
Material no.: 1493162

Product features

- Ex zone 1 and 21
- Double insulated ⧈
- Mounting hole diameter 22.5 mm
- With pre-wired cable
- Actuator: Emergency-stop push button with collar QRSKUVSE
- Actuator made of plastic
- Reset by key release
- Attention: Please state required international approvals with your order!

Dimensions

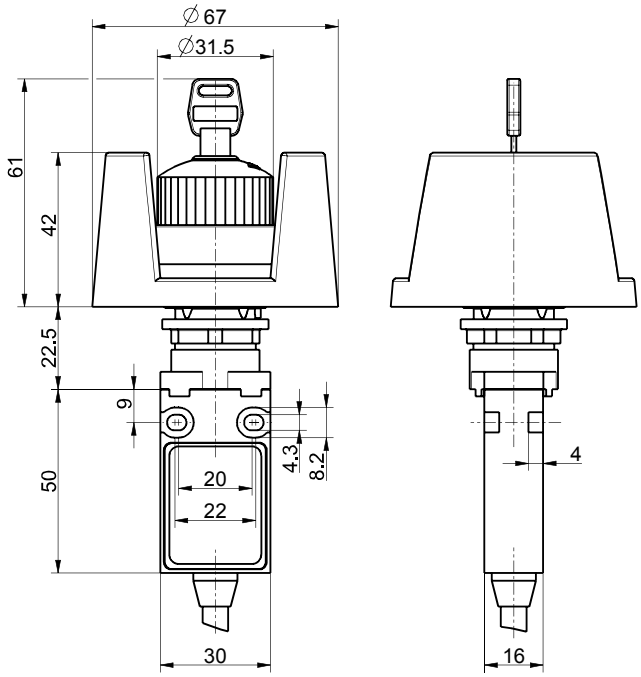

Technical data

Applied standards
EN 60947-5-1, EN 60947-5-5, EN ISO 13849-1, EN ISO 13850, EN IEC 60079-0, EN 60079-1, EN 60079-31

Enclosure
thermoplastic, glass-fibre reinforced, shockproof, self-extinguishing UL 94 V-0

Degree of protection
device: IP65 (EN IEC 60079-0 + IEC/EN 60529)
actuator: IP65 (IEC/EN 60529)

B_{10d} (10 % load)
60 000

T_M
max. 20 years

Contact material
silver

Switching system
slow action, positive break NC contacts ⊖

Switching elements
2 NC contacts, type Zb

Connection
pre-wired cable H05VV-F

Cable cross-section
4 x 0.75 mm²

Cable length
3 m

Rated impulse withstand voltage U_{imp}
4 kV

Rated insulation voltage U_i
250 V

Conventional thermal current I_{the}
T6: 6 A, T5: 3 A

Rated operating current/voltage I_e/U_e
6 A/250 VAC; 0.25 A/230 VDC

Utilisation category
AC-15; DC-13

Short-circuit protection
6 A gG/gN fuse

Ambient temperature
T6: –20 °C ⋯ +65 °C,
T5: –20 °C ⋯ +75 °C

Mechanical life
> 30 000 operations

Errors and omissions excepted.

steute Technologies GmbH & Co. KG
www.steute-controltec.com
Brückenstraße 91
32584 Löhne, Germany
+49 5731 745-0
controltec@steute.com

Ex command device
Ex 14 QRSKUVSE 2Ö-3m
Material no.: 1493162

Technical data (contd.)

Operation cycles
max. 1800/h

Impact energy
max. 4 J

Ex marking
II 2G Ex db IIC T6/T5 Gb,
II 2D Ex tb IIIC T80 °C/T95 °C Db
IECEx Ex db IIC T6/T5 Gb,
Ex tb IIIC T80 °C/T95 °C Db

Approvals
PTB 03 ATEX 1070 X
IECEx PTB 06.0098X

Weight
380 g

Contact diagram

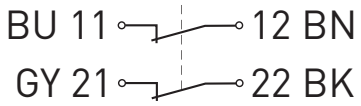

Switching diagram

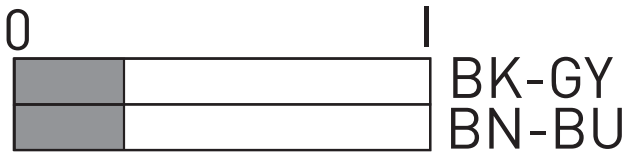

Cut out dimensions

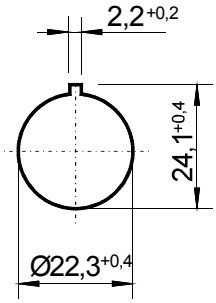

Errors and omissions excepted.