Ex position switch with safety function
Ex ES 99 S-02 -60°C X
Material no.: 1441051

Product features

- Ex zone 1 and 21
- Thermoplastic enclosure
- Cold-resistant down to -60 °C
- High degree of protection IP66 / IP67 / IP69
- Design to EN 50041
- Wiring compartment
- Double insulated ⧈
- Actuator: Plunger S

Notes
- 1 Ex"e" cable gland M20x1.5 included in delivery

Dimensions

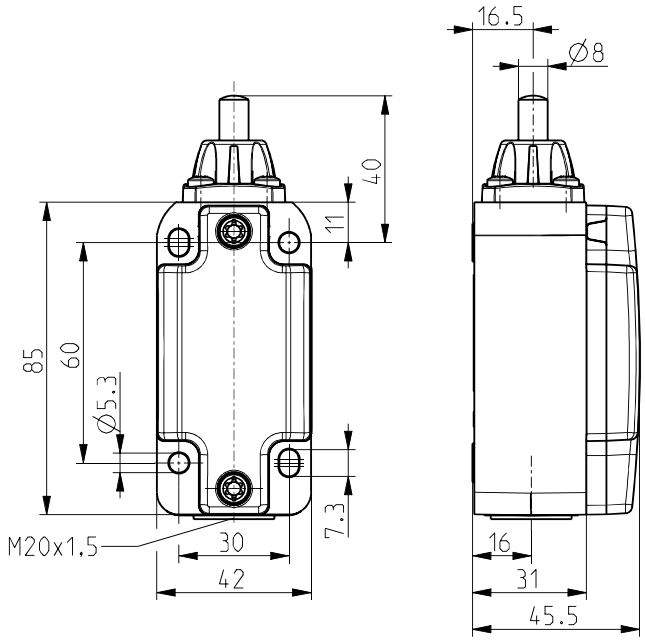

Technical data

Applied standards
EN 60947-5-1, EN IEC 60079-0, EN 60079-1, EN IEC 60079-7, EN 60079-31, EN ISO 13849-1, EN ISO 14119

Enclosure
thermoplastic, glass-fibre reinforced, shockproof, self-extinguishing UL 94 V-0

Cover
thermoset, glass-fibre reinforced, shockproof, self-extinguishing UL 94 V-0

Sealing
silicone

Switch type
type 1

Coding level
no coding

Tightening torque
cover screws: 1.5 ··· 2 Nm

Degree of protection
IP66 (EN 60079-0 + IEC/EN 60529)
IP67, IP69 (IEC/EN 60529)
IP69K (ISO 20653)

B_{10d} (10 % load)
2 million

T_M
max. 20 years

Contact material
Silver, nickel-plated

Switching system
slow action, positive break NC contacts ⊖

Switching elements
2 NC contacts, type Zb

Connection
screw connection terminals

Cable cross-section
min. 0.75 mm² (AWG 18), max. 1.5 mm² (AWG 16), incl. conductor ferrules

Cable entry
M20 x 1.5; screwing depth max. 9 mm; use only Ex approved and certified cable glands with min. degree of protection IP66 and suitable for the specified ambient temperature range

Clamping range
7 ··· 12 mm

Utilisation category
AC-15

Errors and omissions excepted.

Ex position switch with safety function
Ex ES 99 S-02 -60°C X
Material no.: 1441051

Technical data (contd.)

Rated operating current I_e
max. 2 A or 4 A ⧈

Rated operating voltage U_e
max. 400 VAC, max. 250 VAC for unequal potential

Degree of pollution
3

Mechanical life
> 1 million operations

Temperature class
T6

Ambient temperature
–60 °C ··· +55 °C max. 4 A, +60 °C max. 2 A

Impact energy
max. 7 J down to -40 °C, max. 4 J down to -60 °C

Short-circuit protection
2 A / 4 A gG/gN fuse

Ex marking
Ⓔx II 2G Ex db eb IIC T6 Gb,
Ⓔx II 2D Ex tb IIIC T80 °C Db
IECEx Ex db eb IIC T6 Gb,
Ex tb IIIC T80 °C Db

Approvals
BVS 16 ATEX E113 X
IECEx BVS 16.0076X

Contact diagram

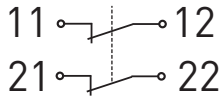

Switching diagram

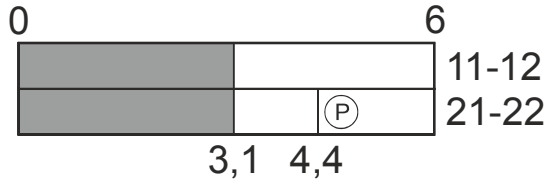

Ⓟ Positive break travel/angle

Errors and omissions excepted.