Ex position switch
Ex 14 TF 1Ö/1S - 2m
Material no.: 1189195 (material no. old: 14034304)

Product features

- Ex zone 1 and 21
- Thermoplastic enclosure
- Double insulated ⧈
- Mounting details to EN 50047
- Suitable for in-line mounting
- With pre-wired cable
- Actuator: Spring rod with steel tip TF
- With rounded steel tip
- Spring rod can be actuated from any direction
- Elasticity of the spring allows for deflection above the max. switching angle of 18°
- Attention: Please state required international approvals with your order!

Dimensions

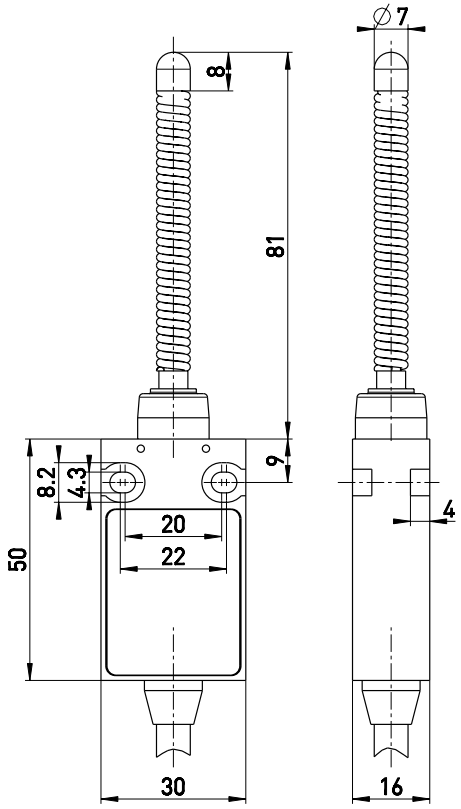

Technical data

Applied standards
EN 60947-5-1, EN IEC 60079-0, EN 60079-1, EN 60079-31

Enclosure
thermoplastic, glass-fibre reinforced, shockproof, self-extinguishing UL 94 V-0

Degree of protection
IP65 (IEC/EN 60529)

Contact material
silver

Switching system
slow action

Switching elements
1 NC/1 NO contact, type Zb

Connection
pre-wired cable H05VV-F

Cable cross-section
4 x 0.75 mm² (incl. conductor ferrules)

Cable length
2 m

Rated impulse withstand voltage U_{imp}
4 kV

Rated insulation voltage U_i
250 V

Conventional thermal current I_{the}
T6: 6 A, T5: 3 A

Rated operating current/voltage I_e/U_e
6 A/250 VAC; 0.25 A/230 VDC

Utilisation category
AC-15; DC-13

Short-circuit protection
6 A gG/gN fuse

Ambient temperature
T6: –20 °C ⋯ +65 °C,
T5: –20 °C ⋯ +75 °C, +90 °C with max. 3 A

Mechanical life
> 1 million operations

Operation cycles
max. 1800/h

Errors and omissions excepted.

Ex position switch
Ex 14 TF 1Ö/1S - 2m
Material no.: 1189195 (material no. old: 14034304)

Technical data (contd.)

Repeat accuracy of switching points
± 0.1 mm

Contact opening
max. 2 x 4 mm

Ex marking
II 2G Ex db IIC T6/T5 Gb,
II 2D Ex tb IIIC T80 °C/T95 °C Db
IECEx Ex db IIC T6/T5 Gb,
Ex tb IIIC T80 °C/T95 °C Db

Approvals
PTB 03 ATEX 1070 X
IECEx PTB 06.0098X

Weight
200 g

Contact diagram

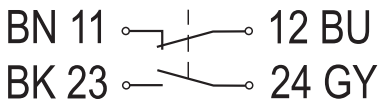

Switching diagram

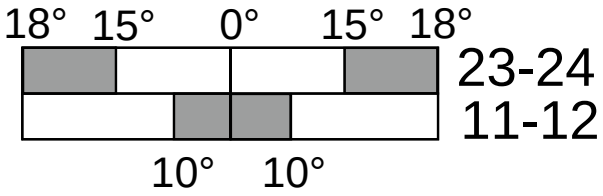

Errors and omissions excepted.