Ex position switch with safety function
Ex 14 R 1Ö/1S - 10m
Material no.: 1045365 (material no. old: 14009904)

Product features

- Ex zone 1 and 21
- Thermoplastic enclosure
- Double insulated
- Mounting details to EN 50047
- Suitable for in-line mounting
- With pre-wired cable
- Actuator: Roller plunger R
- Actuating speed max. 0.5 m/s with a vertical actuating angle of 30°
- Metal roller
- Attention: Please state required international approvals with your order!

Notes
- Actuator can be repositioned by 90° on request

Dimensions

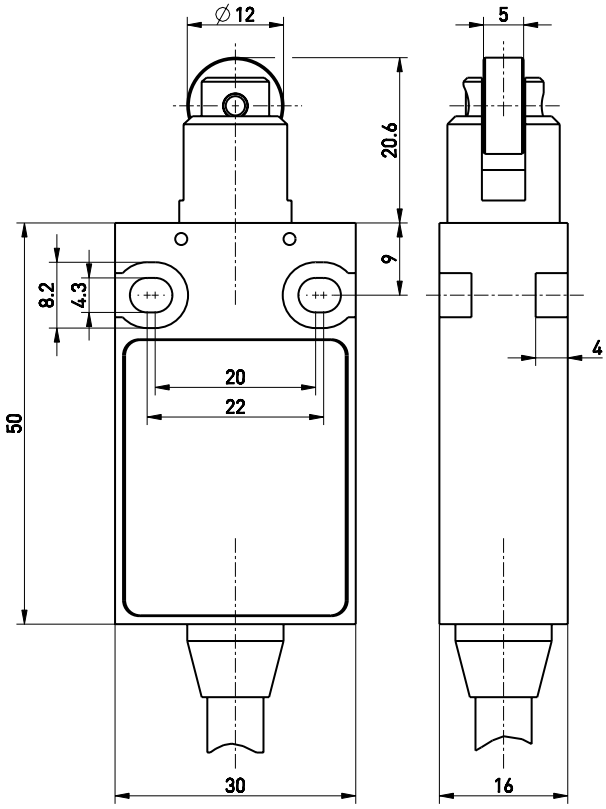

Technical data

Applied standards
EN 60947-5-1, EN IEC 60079-0, EN 60079-1, EN 60079-31, EN ISO 13849-1, EN ISO 14119

Enclosure
thermoplastic, glass-fibre reinforced, shockproof, self-extinguishing UL 94 V-0

Switch type
type 1

Coding level
no coding

Degree of protection
IP65 (IEC/EN 60529)

B_{10d} (10 % load)
2 million

T_M
max. 20 years

Contact material
silver

Switching system
slow action, positive break NC contacts

Switching elements
1 NC/1 NO contact, type Zb

Connection
pre-wired cable H05VV-F

Cable cross-section
4 x 0.75 mm² (incl. conductor ferrules)

Cable length
10 m

Rated impulse withstand voltage U_{imp}
4 kV

Rated insulation voltage U_i
250 V

Conventional thermal current I_{the}
T6: 6 A, T5: 3 A

Rated operating current/voltage I_e/U_e
6 A/250 VAC; 0.25 A/230 VDC

Errors and omissions excepted.

Ex position switch with safety function
Ex 14 R 1Ö/1S - 10m
Material no.: 1045365 (material no. old: 14009904)

Technical data (contd.)

Utilisation category
AC-15; DC-13

Short-circuit protection
6 A gG/gN fuse

Ambient temperature
T6: –20 °C ⋯ +65 °C,
T5: –20 °C ⋯ +75 °C, +90 °C with max. 3 A

Mechanical life
> 1 million operations

Operation cycles
max. 1800/h

Repeat accuracy of switching points
± 0.1 mm

Contact opening
max. 2 x 4 mm

Ex marking
Ⓔx II 2G Ex db IIC T6/T5 Gb,
Ⓔx II 2D Ex tb IIIC T80 °C/T95 °C Db
IECEx Ex db IIC T6/T5 Gb,
Ex tb IIIC T80 °C/T95 °C Db

Approvals
PTB 03 ATEX 1070 X
IECEx PTB 06.0098X

Weight
800 g

Contact diagram

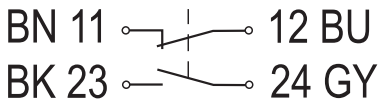

Switching diagram

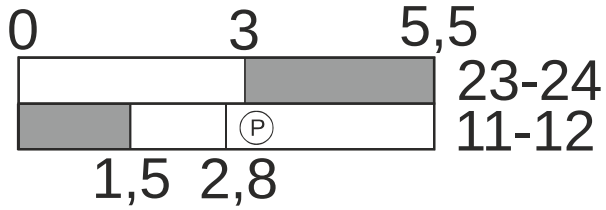

Ⓟ Positive break travel/angle

Errors and omissions excepted.