Ex belt alignment switch
Ex ZS 73 SR 1S/1Ö UE-3D - mid-position centered
Material no.: 1186670 (material no. old: 73231302)

Product features

- Ex zone 22
- Metal enclosure
- 2 contacts
- Wiring compartment
- Mid-position centered (lever springs back to mid-position)
- Belt alignment lever continuously adjustable using a clamp mechanism
- Belt-alignment roller made of stainless steel 1.4301

Dimensions

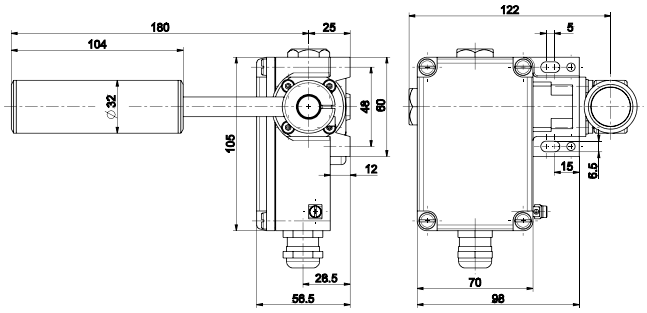

Technical data

Applied standards
EN 60947-5-1, EN 60947-5-5, EN IEC 60079-0, EN 60079-31, EN ISO 13849-1

Enclosure
aluminium die-cast, enamel finish

Cover
thermoplastic, glass-fibre reinforced, shockproof, self-extinguishing UL 94 V-0

Degree of protection
IP65/IP67 (IEC/EN 60529)

B_{10d} (10 % load)
2 million

T_M
max. 20 years

Contact material
silver

Switching system
slow action, positive break NC contacts ⊖

Switching elements
1 NC/1 NO contact with contact overlapping, type Zb

Connection
screw connection terminals

Cable entry
1 x M20 x 1.5

Clamping range
6 ··· 12 mm

Rated operating current/voltage I_e/U_e
6 A/250 VAC

Rated insulation voltage U_i
250 V

Conventional thermal current I_{the}
6 A

Utilisation category
AC-15

Short-circuit protection
6 A gG/gN fuse

Ambient temperature
–20 °C ··· +65 °C

Mechanical life
> 1 million operations

Ex marking
Ⓔx II 3D Ex tc IIIC T80°C Dc

Weight
1312 g

Contact diagram

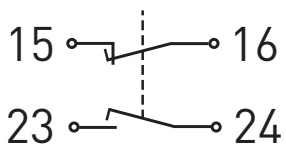

Switching diagram

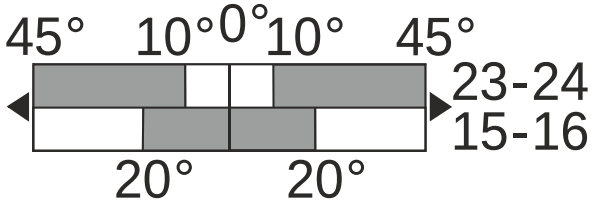

Errors and omissions excepted.