Position switch
E 12 DL - 5m
Material no.: 1188884 (material no. old: 12723007)

Product features

- Metal enclosure
- Snap action, change-over contact with single break
- Suitable for in-line mounting
- With pre-wired cable
- Actuator: Long rocking lever DL
- Actuating speed max. 0.5 m/s with a vertical actuating angle of 45°
- Wear-resistant plastic roller
- Lever can be repositioned in 10° steps clockwise or counter-clockwise

Notes
- Actuator can be repositioned by 180° on request
- With metal roller available on request

Dimensions

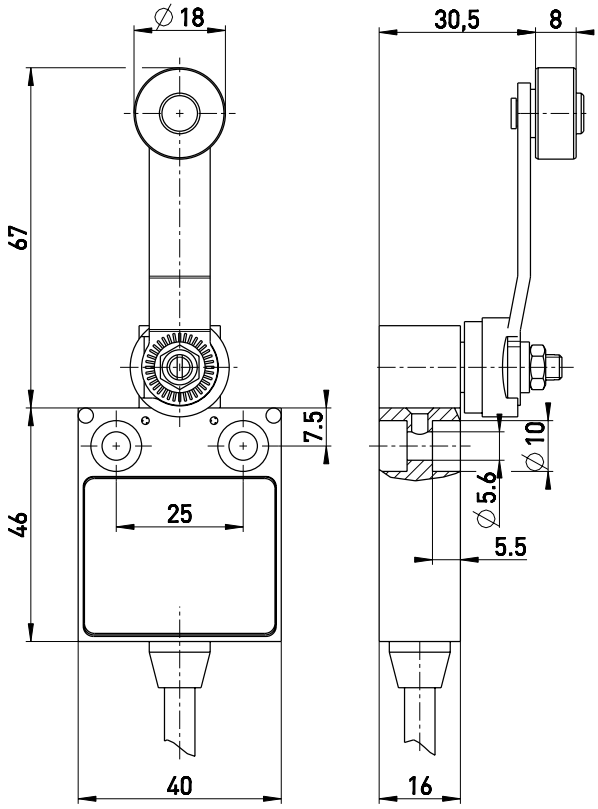

Technical data

Applied standards
EN 60947-5-1

Enclosure
aluminium die-cast, powder-coated

Degree of protection
IP67 (IEC/EN 60529)

Contact material
silver

Switching elements
1 change-over contact with single break, type C

Switching system
snap action

Connection
pre-wired cable H05VV-F

Cable cross-section
4 x 0.75 mm²

Cable length
5 m

Rated impulse withstand voltage U_{imp}
4 kV

Rated insulation voltage U_i
250 V

Conventional thermal current I_{the}
5 A

Utilisation category
AC-15; DC-13

Rated operating current/voltage I_e/U_e
5 A/250 VAC; 0.16 A/230 VDC

Short-circuit protection
5 A gG/gN fuse

Mechanical life
> 1 million operations

Operation cycles
max. 1800/h

Ambient temperature
–20 °C ⋯ +75 °C

Errors and omissions excepted.

Position switch
E 12 DL - 5m
Material no.: 1188884 (material no. old: 12723007)

Technical data (contd.)

Approvals

Switching diagram

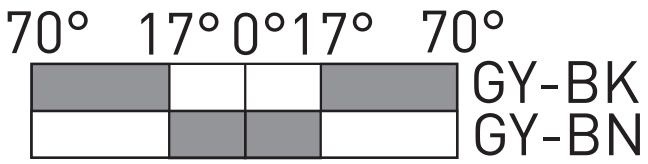

Contact diagram

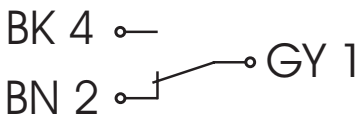

Errors and omissions excepted.