# Multi-function handle
# TGM-200-W GR xx-R
# Material no.: 1314767

## Product features

- Aluminium handle, silver matt anodised
- Long life
- Variant for left-hinged doors
- Enabling push button: single break change-over contact
- Green and red LED
- With plug-in connector M12 x 1, 12-pole
- Collars (blue, red, green) are included in delivery

## Dimensions

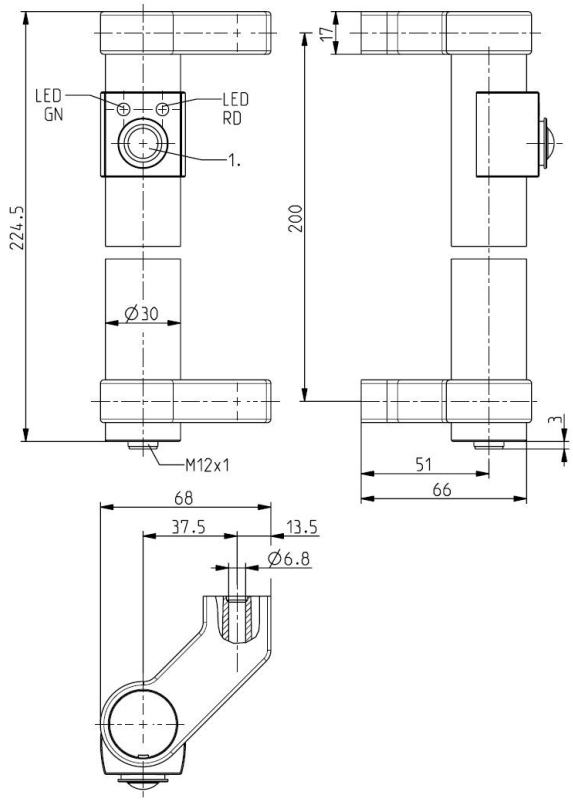


## Technical data

**Applied standards**
EN 60947-5-1

**Enclosure**
aluminium, anodised, silver matt

**Degree of protection**
IP67 (IEC/EN 60529)

**Connection**
Plug-in-connector M12 x 1, 12-poles

**Rated operating current/voltage $I_e/U_e$**
0.5 A/24 VDC; LEDs: 10 mA/24 VDC

**Rated insulation voltage $U_i$**
30 VDC

**Degree of pollution**
3

**Mechanical life**
> 1 million operations

**Ambient temperature**
–25 °C ⋯ +55 °C

Errors and omissions excepted.

# Multi-function handle
# TGM-200-W GR xx-R
# Material no.: 1314767

## Contact diagram LEDs

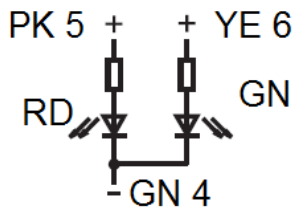


## Contact diagram enabling push-button

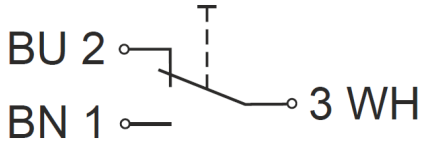


## Plug-in connector

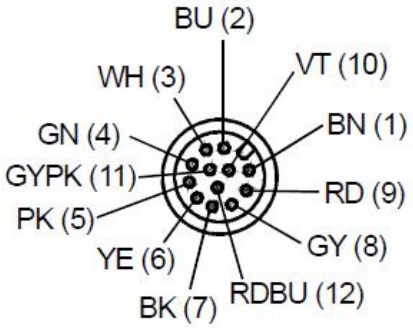


Plug-in configuration (view from plug side)
Plug-in connector M12 x 1, 12-pole

Errors and omissions excepted.