Foot switch with metal enclosure
GFI POTI 10K 1PW
Material no.: 1183886 (material no. old: 53148001)

Product features

- With potentiometer 10 kΩ: Analogue output
- Metal enclosure
- Ergonomic pedal design and low pedal height
- Wiring compartment

Dimensions

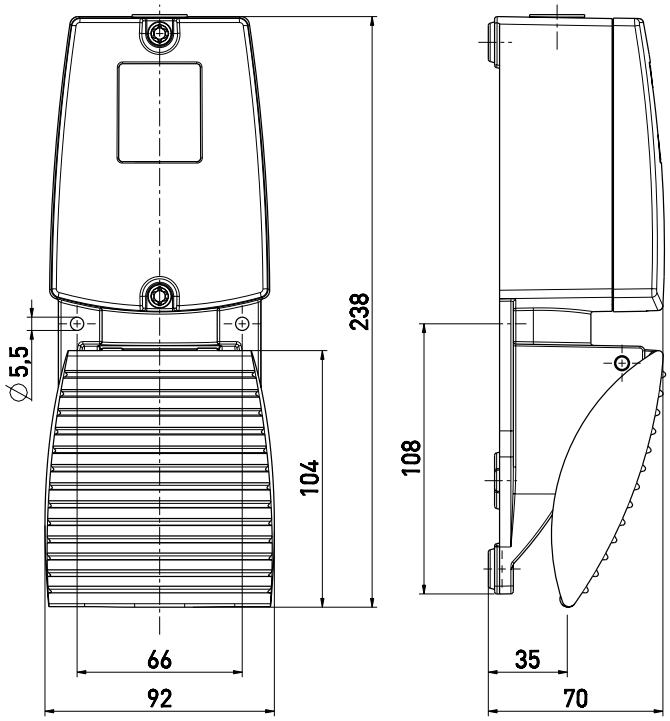

Technical data

Applied standards
EN 60947-5-1

Enclosure
aluminium die-cast, powder-coated

Cover
aluminium die-cast, powder-coated

Pedal
aluminium die-cast, powder-coated

Degree of protection
IP65 (IEC/EN 60529)

Connection
soldering terminals

Cable entry
1 x M20 x 1.5

Contact material
silver, gold-plated

Switching system
potentiometer

Resistance R
100 Ω ⋯ 10 kΩ ±5 %

Linearity
±0.5 %

Rated operating current/voltage I_e/U_e
micro switch: 0.1 A/250 VAC; 0.1 A/24 VDC

Switching capacity
potentiometer: max. 1.5 W / max. slider current 1 mA / max. operating voltage 45 Vdc / 30 Vac

Ambient temperature
–15 °C ⋯ +80 °C

Mechanical life
200 000 operations

Note
The built-in micro switch provides for potential-free switching of the potentiometer.

Weight
920 g

Errors and omissions excepted.

Foot switch with metal enclosure
GFI POTI 10K 1PW
Material no.: 1183886 (material no. old: 53148001)
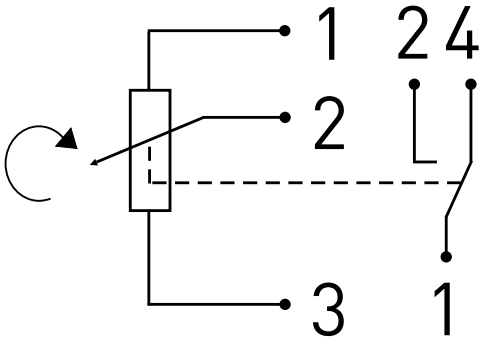
Contact diagram