Emergency pull-wire switch
ZS 75 2Ö/2S WVS / 120-180 N
Material no.: 1048436 (material no. old: 75442604)

Product features

- Metal enclosure
- 4 contacts
- Wire length up to 130 m
- Adjustable spring force: 120-180 N
- Release by key
- Wire pull and breakage detection
- Watertight collar W for protection against penetration of dirt

Notes

- At 5 m distance intermediate wire supports are required. One wire thimble is provided.

Dimensions

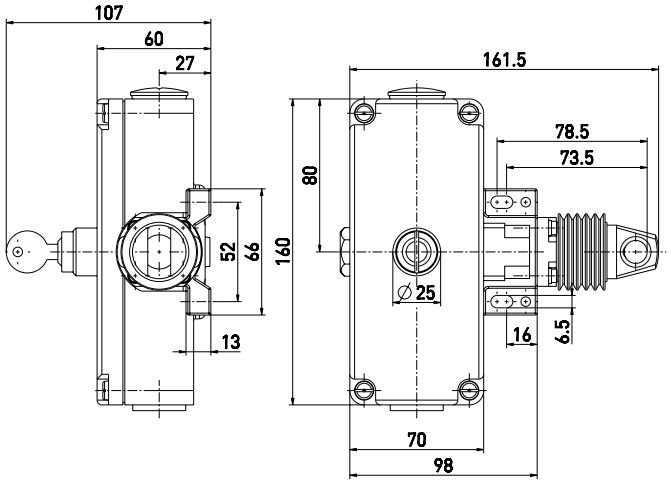

Technical data

Applied standards
EN 60947-5-1, EN 60947-5-5, EN ISO 13850, EN ISO 13849-1

Enclosure
aluminium die-cast, powder-coated

Cover
aluminium die-cast, powder-coated

Degree of protection
IP54 (IEC/EN 60529)

B_{10d} (10 % load)
100 000

T_M
max. 20 years

Contact material
silver

Switching elements
2 NC/2 NO contacts, type Zb

Switching system
snap action, positive break NC contacts ⊖

Connection
screw connection terminals

Cable cross-section
min. 0.5 mm², max. 2.5 mm² (incl. conductor ferrules)

Stripping length
6 mm

Cable entry
2 x M25 x 1.5

Rated impulse withstand voltage U_{imp}
6 kV

Rated insulation voltage U_i
400 V

Conventional thermal current I_{the}
6 A

Utilisation category
AC-15

Rated operating current/voltage I_e/U_e
6 A/400 VAC

Short-circuit protection
6 A gG/gN fuse

Ambient temperature
–25 °C ··· +70 °C

Mechanical life
> 100 000 operations

Max. wire length
130 m

Approvals

Weight
1130 g

Errors and omissions excepted.

Emergency pull-wire switch
ZS 75 2Ö/2S WVS / 120-180 N
Material no.: 1048436 (material no. old: 75442604)

Switching diagram

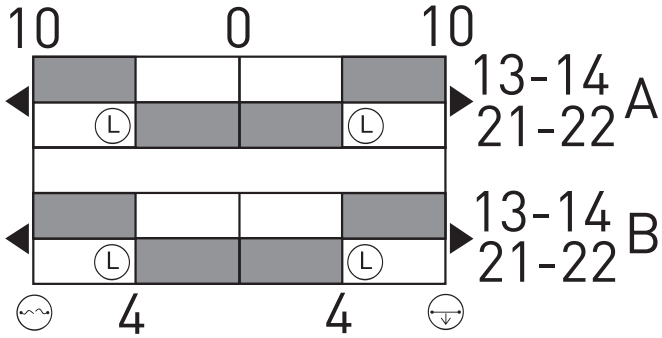

Latching point
Wire breakage detection
Wire pull detection

Contact diagram

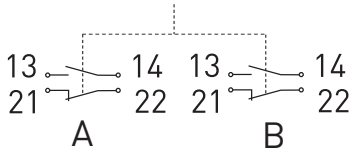

Errors and omissions excepted.