Wireless universal transmitter
RF 96 ST SW868
Material no.: 1206036 (material no. old: 66800601)

Product features

- Thermoplastic enclosure
- Mounting details to EN 50047
- Plug-in connector M12
- sWave® wireless technology
- No wiring and pipe laying required
- Power supply by Lithium battery
- Easy programming of receiver
- Output signal can be individually configured at the receiver

Notes
- The RF 96 ST may be used in combination with wireless inductive sensor RF IS or wireless magnetic sensor RF RC M10
- Connection of external switching contact (potentialfree contact) with gold contacts possible.
- Factory delivery with battery type SL-760 (AA)

Dimensions

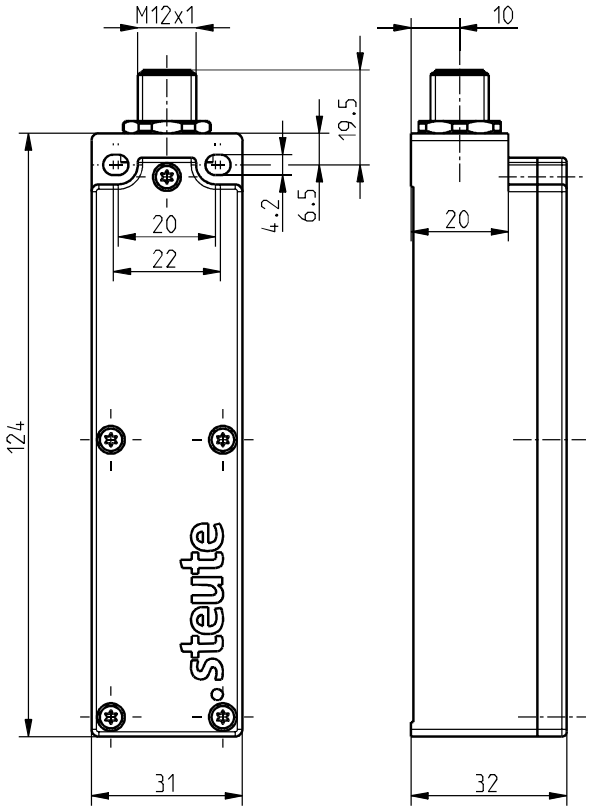

General technical data

Applied standards
EN 60947-5-1, EN 61000-6-2, EN 61000-6-3, EN 301 489-1, EN 301 489-3, EN 300 220-1, EN 300 220-2

Enclosure
thermoplastic, glass-fibre reinforced, shockproof, self-extinguishing UL 94 V-0

Tightening torque
M4 enclosure mounting screws: max 1.2 Nm
M2.5 cover screws: approx. 0.45 Nm

Degree of protection
IP67 (IEC/EN 60529)

Connection
plug-in connector M12 x 1, 4-pole

Connectable devices
RF IS M8, RF IS M12, RF IS M18, RF IS M30, RF RC M10, external switches using the connecting cable 1215497

Ambient temperature
–20 °C ⋯ +65 °C

Operation cycles
max. 12000 telegrams with repetitions/h

Switching frequency
max. 5 Hz

Standby current
15 µA

Actuating time
min. 80 ms

Note
status signal adjustable via jumper, no, 10 s, 100 s, 1000 s, 10000 s
delivery state: jumper position without status signal
transmission of battery voltage and switching condition

Wireless approvals
Europe: RED 2014/53/EU

Weight
120 g

Errors and omissions excepted.

Wireless universal transmitter
RF 96 ST SW868
Material no.: 1206036 (material no. old: 66800601)

Wireless technology

Protocol
sWave®

Frequency
868.3 MHz (Europe)

Transmission power
< 25 mW

Data rate
66 kbps

Channel bandwidth
350 kHz

Wireless range
max. 450 m outdoors, max. 40 m indoors

Voltage supply

Voltage source
lithium battery Tadiran SL-2770 (replaceable)

System
$Li/SOCl_2$

Nominal voltage
3.6 V

Nominal capacity
8.5 Ah

Battery life – inductive sensor
depending on the switching frequency
10 s: approx. 3.7 years
100 s: approx. 3.9 years
1,000 s: approx. 3.9 years

Battery life – magnetic sensor / external contact
depending on the switching frequency
10 s: >10 years (max. manufacturer's specification of storage life)

Alternative voltage supply

Voltage source
lithium battery Tadiran SL-760 (replaceable)

System
$Li/SOCl_2$

Nominal voltage
3.6 V

Nominal capacity
2.2 Ah

Battery life – inductive sensor
depending on the switching frequency
10 s: approx. 1.0 years; 100 s: approx. 1.0 years; 1,000 s: approx. 1.0 years

Battery life – magnetic sensor / external contact
depending on the switching frequency
10 s: approx. 7.2 years
100 s: >10 years (max. manufacturer's specification of storage life)

External switch contact

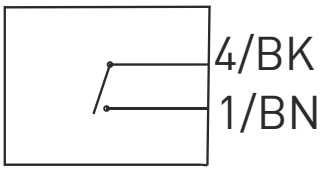

Sensors

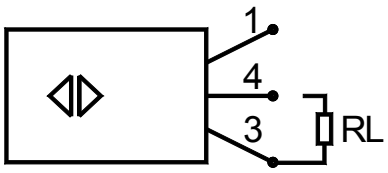

Errors and omissions excepted.

Wireless universal transmitter
RF 96 ST SW868
Material no.: 1206036 (material no. old: 66800601)

Plug-in configuration

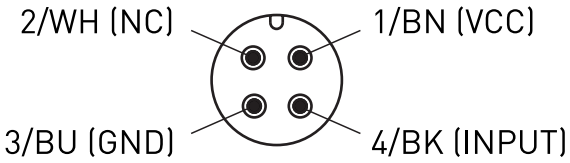

NC = not connected

Colour coding only valid for
coupling 4-poles mat. no. 1215497 and
coupling 4-poles mat. no. 1262873